STANDARD DATA EP/AP (CONT'D)

		DETAILS	
MATERIALS	TYPE	**AP**	**EP**
	Connector shell Shell finish	Modified PPE Resin Black	Diecast Zinc Alloy Satin Nickel or Black
	Insulators	UL94V-0 PBT Resin	
	Cable Bushing	Silicon Rubber	UL94 HB Thermoplastic Elastomer
	Male contact Machined - Solder Material / Plating	Brass / Bright Tin	
	Female contact Machined - Solder Material / Plating	Brass / Bright Tin	
CLAMPING CHARACTERISTICS	Cable OD Range	11mm to 17mm (0.43" to 0.67")	9mm to 16mm (0.35" to 0.63")
	Retention Method	Two opposing plastic screws	Metal saddle clamp

Rev 3 - 03/2013

EP/AP SERIES PANEL CUTOUT DATA - FRONT VIEW

EP 13/AP 13/AP 21

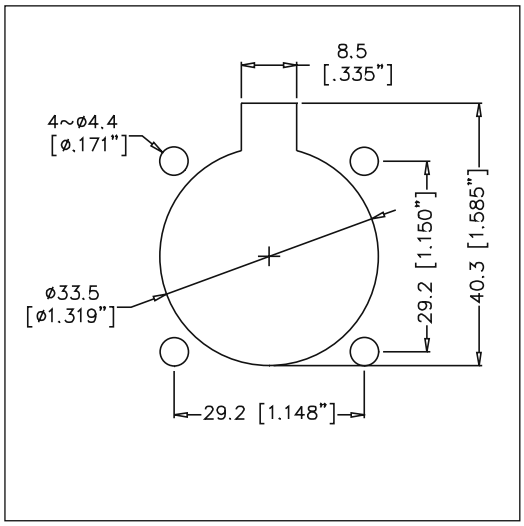
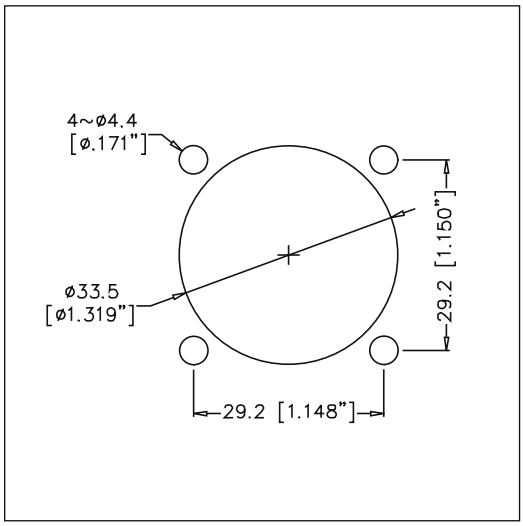
EP 14/AP 14/AP 22