LEGEND ◊ = KEY PRODUCT CHARACTERRISTICS

NOTE: DIMENSIONS IN (PARENTHESIS) ARE REF ONLY

REV	DESCRIPTION	DATE	BY	CHG/No
1	FIRST ISSUE	05-02-18	MH	---
2	CORRECT SCHEMATIC DIAGRAM	17-06-25	MH	9767
3	CORRECT MOUNTING HOLES DIAM	08-08-25	MH	9770

Amphenol Australia RoHS Compliant Product

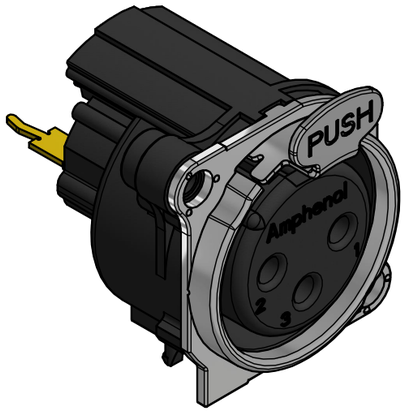

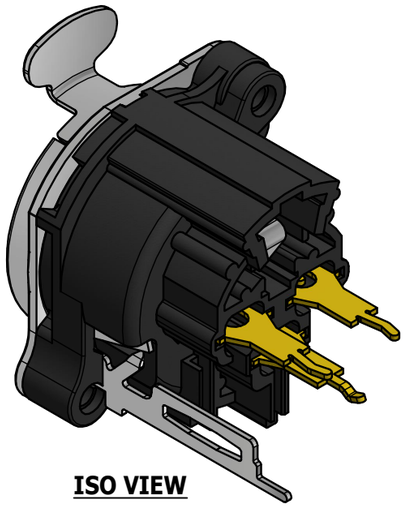

ISO VIEW

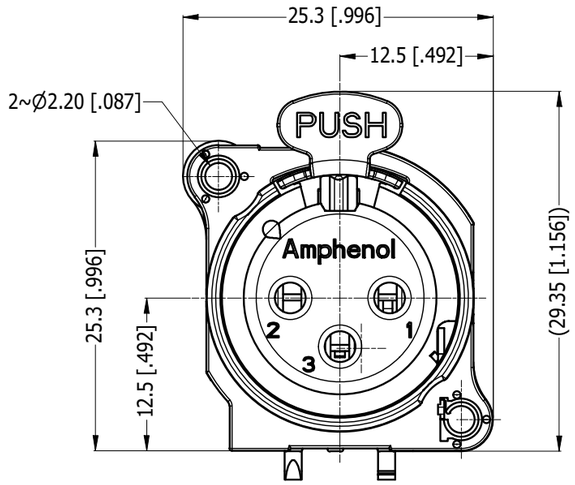

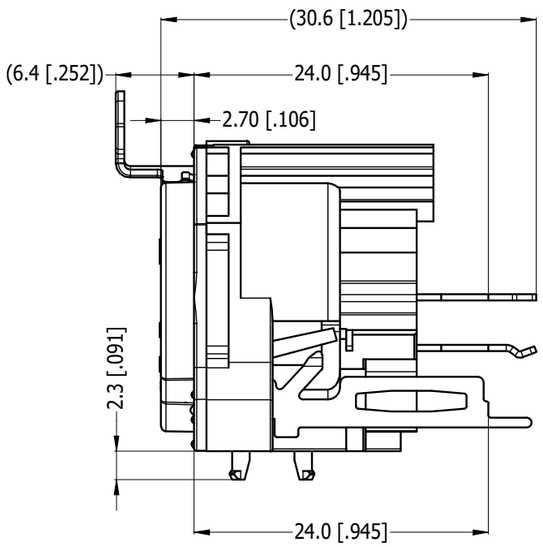

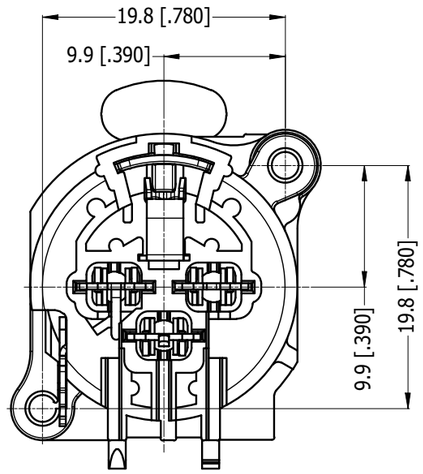

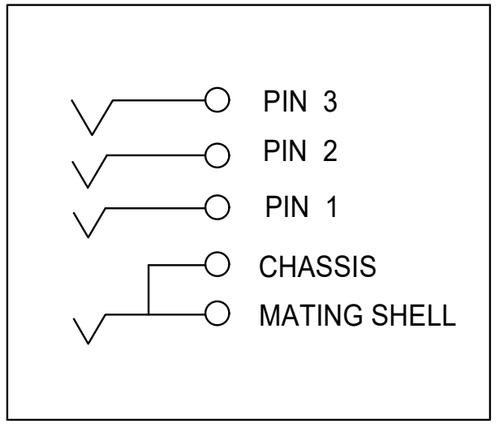

SCHEMATIC CHART

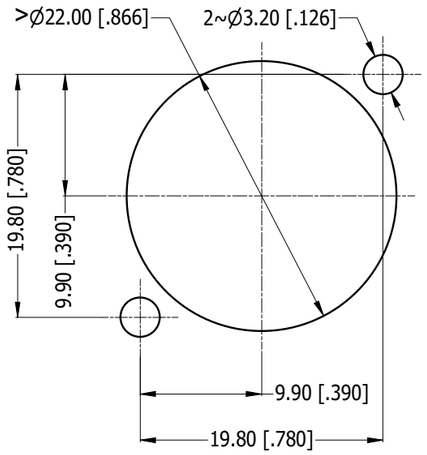

PANEL CUT OUT
REAR VIEW

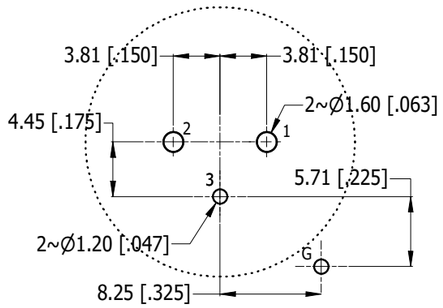

PCB-LAYOUT
COMPONENT SIDE
TOLERANCE: ±0.05mm [.002"]

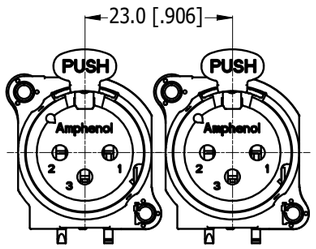

MIN MOUNTING PITCH
SCALE 1:1

PART NUMBER TABLE	
PART NUMBER	METAL FLANGE FINISH
AC3FBVL2-AU-PRE	SATIN NICKEL
AC3FBVBL2-AU-PRE	MATT BLACK

UNLESS OTHERWISE SPECIFIED TOLERANCE TO BE LINEAR: X ±0.5, X.X ±0.2, X.XX ±0.1 ANGULAR: X° ±1, X.X' ±30', X.X'X" ±15' BREAK ALL SHARP EDGES AND REMOVE ALL BURRS DO NOT SCALE DIMENSIONS IN MILIMETRES	THIS DOCUMENT IS THE PROPERTY OF AMPHENOL AUSTRALIA PTY. LTD. . NO PART THEREOF MAY BE REPRODUCED AND USED WITHOUT THE PRIOR WRITTEN CONSENT OF THE OWNER MATERIAL: REFER TO COMPONENT FINISH: REFER TO COMPONENT THIRD ANGLE PROJECTION	DRN: MH CKD: M.H APP'D: P.M SCALE: 2:1	DATE: 05-02-18 DATE: 08-08-25 DATE: 08-08-25 SIZE: A3	Amphenol Amphenol Australia Pty.Ltd, 22 Industry Blvd, Carrum Downs, VIC 3201 TITLE: AC3FBV2-AU-PRE VERTICAL FEMALE CUSTOMER DRAWING CAD FILE: 55011288000113	PART No: SEE TABLE DRAWING NO. 55011288-000-2 SHEET 2/2